Cambridge Assessment International Education

Cambridge IGCSE™

PHYSICS **0625/21**

Paper 2 Multiple Choice (Extended) **May/June 2021**

45 minutes

You must answer on the multiple choice answer sheet.

You will need: Multiple choice answer sheet
Soft clean eraser
Soft pencil (type B or HB is recommended)

INSTRUCTIONS

- There are **forty** questions on this paper. Answer **all** questions.
- For each question there are four possible answers **A**, **B**, **C** and **D**. Choose the **one** you consider correct and record your choice in soft pencil on the multiple choice answer sheet.
- Follow the instructions on the multiple choice answer sheet.
- Write in soft pencil.
- Write your name, centre number and candidate number on the multiple choice answer sheet in the spaces provided unless this has been done for you.
- Do **not** use correction fluid.
- Do **not** write on any bar codes.
- You may use a calculator.
- Take the weight of 1.0 kg to be 10 N (acceleration of free fall = 10 m / s^2).

INFORMATION

- The total mark for this paper is 40.
- Each correct answer will score one mark.
- Any rough working should be done on this question paper.

This document has **16** pages.

IB21 06_0625_21/3RP
© UCLES 2021

[Turn over

www.root19.com +91 - 9969 353 391

1 The diagram shows a stone of irregular shape.

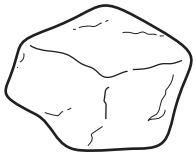

Which property of the stone can be found by lowering it into a measuring cylinder half-filled with water?

A length

B mass

C volume

D weight

2 Which row describes speed and velocity?

	speed	velocity
A	scalar	scalar
B	scalar	vector
C	vector	scalar
D	vector	vector

3 Four balls with different masses are dropped from the heights shown.

Air resistance may be ignored.

Which ball has the smallest average speed?

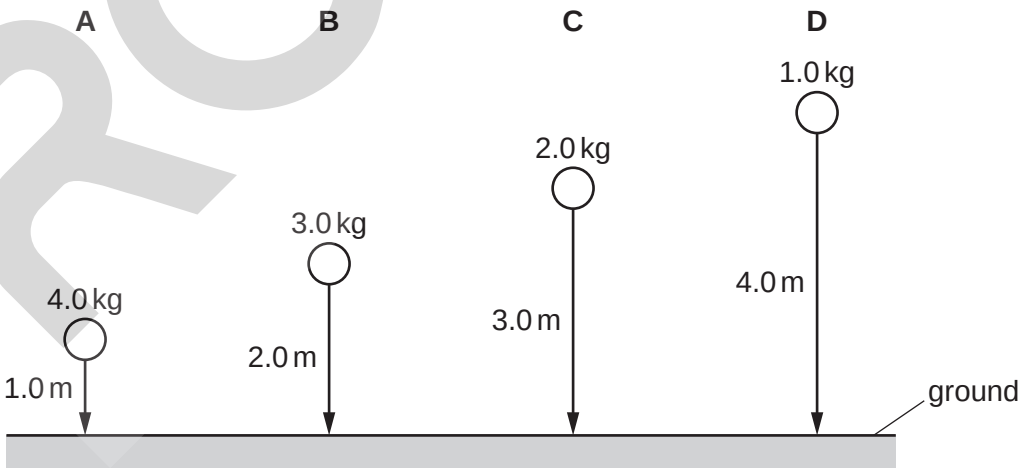

© UCLES 2021
www.root19.com

+91 - 9969 353 391

4 An object of mass 2.0 kg is taken from the Earth, where the gravitational field strength is 10 N / kg, to the Moon, where the gravitational field strength is 1.6 N / kg.

Which row is correct?

	weight on the Earth / N	weight on the Moon / N
A	0.20	0.80
B	0.20	3.2
C	20	0.80
D	20	3.2

5 The mass of an empty flask is 34 g.

The volume of liquid added to the flask is 20 cm^3.

The total mass of the flask and the liquid is 50 g.

What is the density of the liquid?

A 0.80 g / cm^3 **B** 1.25 g / cm^3 **C** 2.50 g / cm^3 **D** 4.20 g / cm^3

6 The extension–load graph for a spring is shown. The unstretched length of the spring is 17.0 cm.

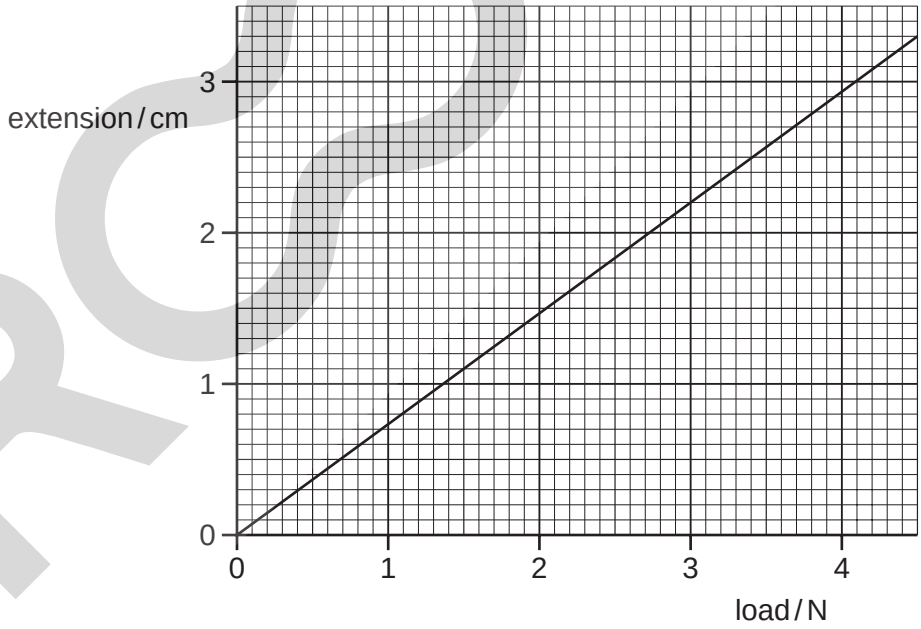

When an object is suspended from the spring, the length of the spring is 19.2 cm.

What is the weight of the object?

A 1.4 N **B** 1.6 N **C** 2.6 N **D** 3.0 N

www.root19.com +91 - 9969 353 591

7 A cart has a mass of 10 kg. A boy pushes on the cart horizontally with a force of 50 N. The cart accelerates at 0.50 m / s^2.

What is the frictional force acting on the cart?

A 5.0 N **B** 20 N **C** 30 N **D** 45 N

8 A ball has a mass of 2.0 kg. The ball approaches a wall at a speed of 3.0 m / s and rebounds at a speed of 1.0 m / s.

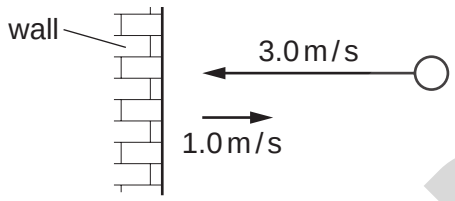

What is the impulse on the wall?

A 4.0 N **B** 4.0 N s **C** 8.0 N **D** 8.0 N s

9 Which situation involves no work being done and no energy being transferred?

A a car skidding to a stop on a road

B a crane lifting a load

C a heavy load hanging from a strong bar

D a student dragging a big box over a rough floor

10 A student suggests that there are several ways of transferring energy to a small, stationary block of iron on a smooth table. He makes the following suggestions.

1 Heat it.

2 Shine light on it.

3 Pass a current through it.

Which suggestions are correct?

A 1 and 2 only **B** 1 and 3 only **C** 2 and 3 only **D** 1, 2 and 3

11 An engine produces 240 kJ of energy in 2.0 minutes.

What is the power output of the engine?

A 2.0 kW **B** 120 kW **C** 480 kW **D** 28 800 kW

© UCLES 2021
www.root19.com

+91 - 9969 353 391

12 A book has a mass of 400 g.

The surface of the book in contact with a table has dimensions 0.10 m × 0.20 m.

The gravitational field strength *g* is 10 N / kg.

What is the pressure exerted on the table due to the book?

A 0.08 N / m^2 **B** 8.0 N / m^2 **C** 20 N / m^2 **D** 200 N / m^2

13 The diagram shows a mercury barometer.

At which point is the pressure greater than atmospheric pressure?

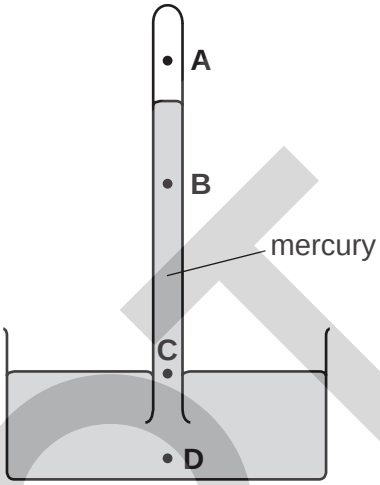

14 The table gives information about molecules.

Which row describes a gas?

	force between molecules	distance between molecules
A	strong	close together
B	strong	far apart
C	negligible	far apart
D	negligible	close together

© UCLES 2021 www.root19.com

+91 - 9969 353 591

15 Very small pollen grains are suspended in water. A bright light shines from the side.

When looked at through a microscope, small specks of light are seen to be moving in a random, jerky manner.

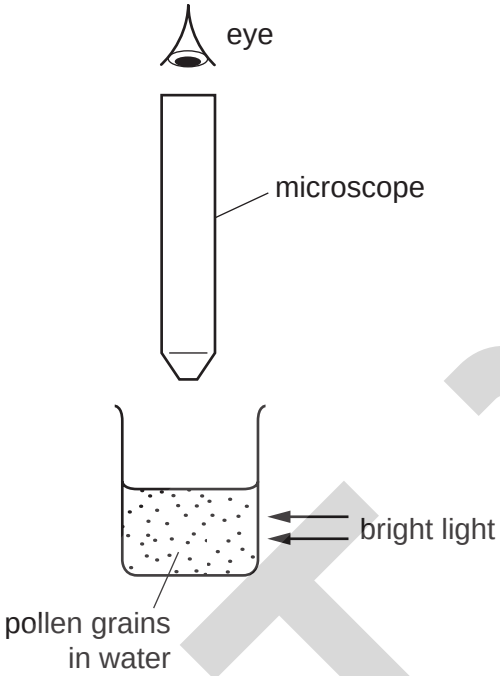

What are the moving specks of light?

A pollen grains being hit by other pollen grains

B pollen grains being hit by water molecules

C water molecules being hit by other water molecules

D water molecules being hit by pollen grains

16 Why are small gaps left between the metal rails of a railway track?

A to allow for expansion of the rails on a hot day

B to allow for contraction of the rails on a hot day

C to allow for expansion of the rails on a cold day

D to allow for contraction of the rails on a cold day

© UCLES 2021
www.root19.com

+91 - 9969 353 391

17 A block of metal absorbs 2000 J of thermal energy.

The temperature of the block rises from 10 °C to 20 °C.

The mass of the block is 2.0 kg.

What is the specific heat capacity of the metal?

A 50 J / (kg °C) **B** 100 J / (kg °C) **C** 200 J / (kg °C) **D** 400 J / (kg °C)

18 Which statement about boiling and evaporation is correct?

A Boiling requires a supply of thermal energy but evaporation does not.

B Evaporation takes place at the surface of a liquid but boiling takes place throughout the liquid.

C When water boils in a kettle, its temperature decreases.

D When water evaporates, its temperature increases.

19 A metal rod is heated at end X.

Why does end Y of the metal rod become hot?

A Energy is transferred from end X of the rod to end Y by vibration of positive ions and by movement of electrons.

B Energy is transferred from end X of the rod to end Y by movement of positive ions only.

C Energy is transferred from end X of the rod to end Y by vibration of positive ions only.

D Energy is transferred from end X of the rod to end Y by movement of electrons only.

www.root19.com +91 - 9969 353 591

20 Two square sheets of metal, P and Q, are heated to the same temperature. The metal sheets are shown.

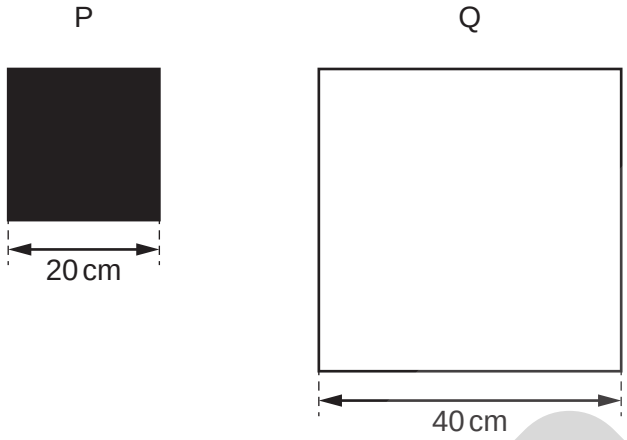

Sheet Q is emitting more radiation than sheet P.

Which statement explains this?

A Dull black surfaces are better conductors of radiation.

B Dull black surfaces are better emitters of radiation.

C The surface area of Q is larger than that of P.

D White surfaces are better absorbers of radiation.

21 A water wave passes into a region where the wave travels more slowly.

As it passes into the slow region, what happens to the frequency and what happens to the wavelength of the wave?

	frequency	wavelength
A	decreases	remains the same
B	increases	remains the same
C	remains the same	decreases
D	remains the same	increases

www.root19.com +91 - 9969 353 391

22 Light travelling at a speed of 3.0×10^8 m/s strikes the surface of a glass block and undergoes refraction as it enters the block.

The diagram shows a ray of this light before and after it enters the block.

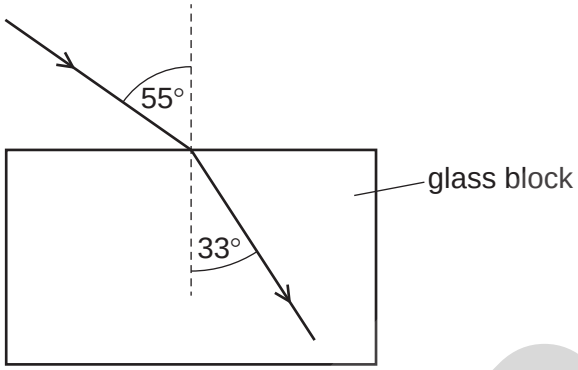

What is the speed of light in the glass?

A 1.8×10^8 m/s

B 2.0×10^8 m/s

C 4.5×10^8 m/s

D 5.0×10^8 m/s

23 The diagram shows a narrow beam of light incident on a glass-air boundary. Some of the light emerges along the surface of the glass and some is reflected back into the glass.

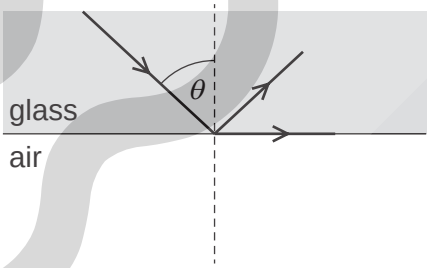

Which row is correct?

	this is an example of total internal reflection	angle θ is the critical angle
A	no	yes
B	no	no
C	yes	no
D	yes	yes

www.root19.com +91 - 9969 353 591

24 An object is placed in front of a thin converging lens.

The diagram shows the paths of two rays from the top of the object.

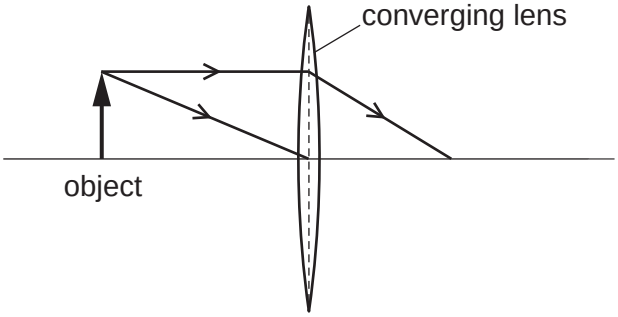

An image of the object is formed on a screen to the right of the lens.

How does this image compare with the object?

A It is larger and inverted.

B It is larger and the same way up.

C It is smaller and inverted.

D It is smaller and the same way up.

25 A remote-controlled vehicle is travelling on the surface of a planet. The vehicle senses an obstacle ahead. It sends a radio message to the control room from where it is being controlled. The control room is 2.4×10^6 km away from the vehicle. The control room sends a message back to the vehicle telling it to stop.

What is the minimum time that elapses between the vehicle sensing the obstacle and receiving the message back from the control room?

A 8.0 ms **B** 16 ms **C** 8.0 s **D** 16 s

26 A sound wave is travelling outwards from a loudspeaker into the surrounding air.

Here are three statements.

1 The air pressure is lower at a rarefaction compared with undisturbed air.

2 The density of the air is less at a compression compared with undisturbed air.

3 The distance from a compression to a rarefaction equals half a wavelength.

Which statements about the sound wave are correct?

A 1 and 2 only **B** 1 and 3 only **C** 2 and 3 only **D** 1, 2 and 3

© UCLES 2021
www.root19.com

+91 - 9969 353 391

27 The sound from a loudspeaker must pass through two materials to reach a microphone.

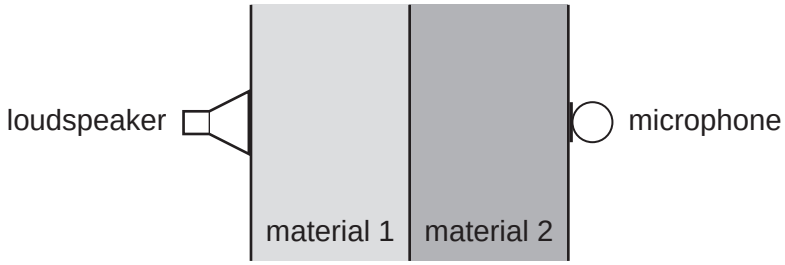

Which combination of materials gives the shortest time for the sound to reach the microphone?

	material 1	material 2
A	air	hydrogen
B	air	water
C	copper	aluminium
D	water	oil

28 Diagram 1 shows a small compass needle with its poles marked. It is not near any magnetic materials.

Diagram 2 shows a bar magnet with its poles marked. The compass needle is placed at point P.

diagram 1

diagram 2

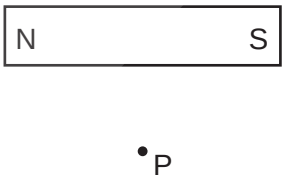

In which direction will the N pole of the compass needle point?

A to the left

B to the right

C down the page

D up the page

© UCLES 2021
www.root19.com

+91 - 9969 353 591

29 A student rubs a plastic rod with a cloth.

The rod becomes positively charged.

What has happened to the rod?

A It has gained electrons.

B It has gained protons.

C It has lost electrons.

D It has lost protons.

30 An isolated metal sphere is positively charged.

It is then brought near to another isolated metal sphere that is neutral.

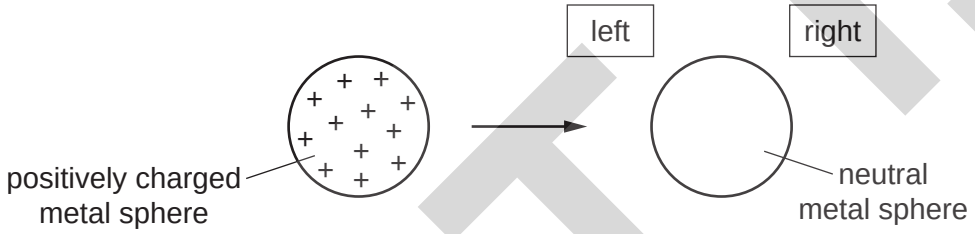

What happens to the charges on the neutral sphere as the positively charged sphere is brought close to it?

A Some positive charges move to the left and some negative charges move to the right.

B Some positive charges move to the right and some negative charges move to the left.

C Some positive charges move to the right, but the negative charges do not move.

D The positive charges do not move, but some negative charges move to the left.

31 Which statement about the resistance of a metal wire is correct?

A The resistance is directly proportional to its length and directly proportional to its cross-sectional area.

B The resistance is directly proportional to its length and inversely proportional to its cross-sectional area.

C The resistance is inversely proportional to its length and directly proportional to its cross-sectional area.

D The resistance is inversely proportional to its length and inversely proportional to its cross-sectional area.

© UCLES 2021
www.root19.com

+91 - 9969 353 391

32 The circuit diagram shows a light-dependent resistor (LDR) in a potential divider.

A voltmeter is connected across the LDR.

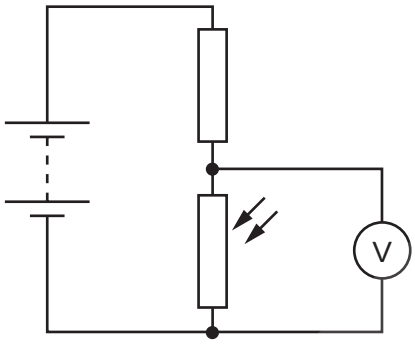

Which row shows the resistance of the LDR and the potential difference (p.d.) shown on the voltmeter at a specific light level?

	light level	resistance of LDR	p.d. shown on the voltmeter
A	bright	low	high
B	bright	high	low
C	dim	high	high
D	dim	low	low

33 Three NAND gates are connected in a single chip as shown.

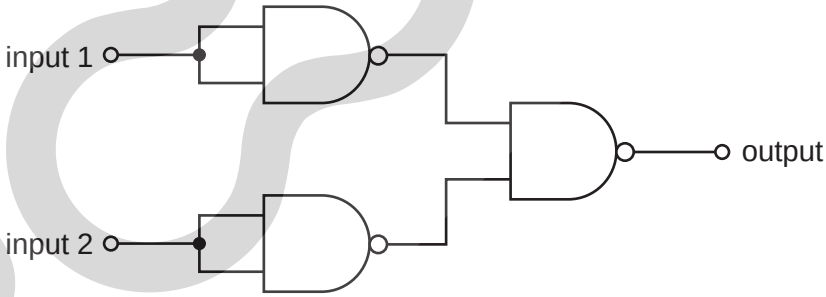

The whole chip behaves as a single logic gate.

Which type of logic gate does the chip act as?

A AND gate

B NAND gate

C NOR gate

D OR gate

www.root19.com +91 - 9969 353 591

34 A solenoid is connected to a very sensitive ammeter. A rod is inserted into one end of the solenoid. The ammeter shows that there is a small electric current in the solenoid while the rod is moving.

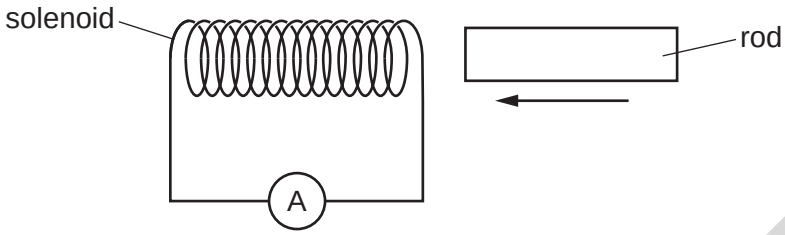

Which rod is being inserted?

A a heated copper rod

B a magnetised steel rod

C an uncharged nylon rod

D a radioactive uranium rod

35 The diagram shows an electric generator with the coil in a vertical position.

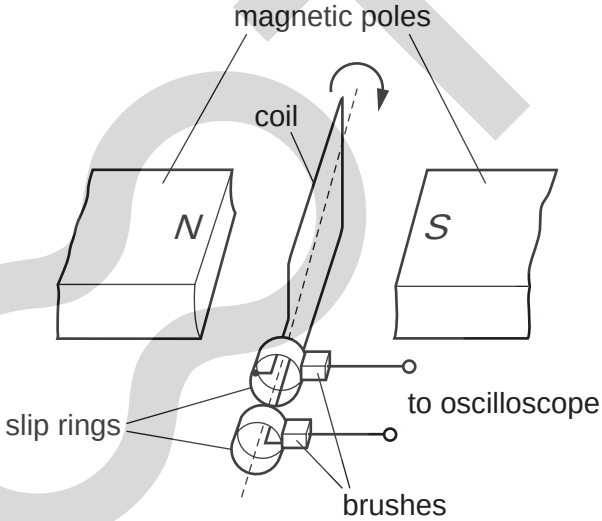

Which row describes the generator?

	the generator produces	the voltage output will be zero when
A	a.c.	the coil is horizontal
B	a.c.	the coil is vertical
C	d.c.	the coil is horizontal
D	d.c.	the coil is vertical

www.root19.com +91 - 9969 353 391

36 The diagram shows a transformer. There are 460 turns on the primary coil and 24 turns on the secondary coil. The primary voltage is 230 V.

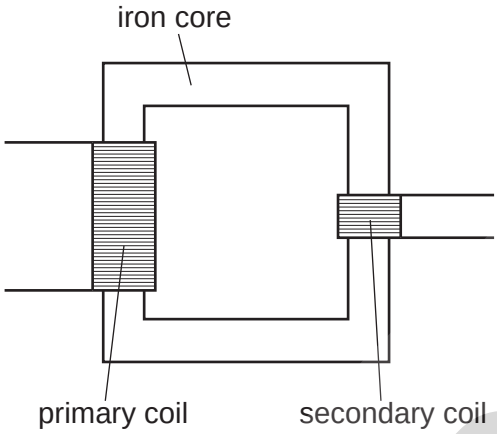

What is the secondary voltage?

A 2.0 V **B** 12 V **C** 48 V **D** 4400 V

37 The charge on a proton is *e*.

What is the charge on an electron and what is the charge on a neutron?

	electron	neutron
A	*e*	*e*
B	*e*	0
C	–*e*	–*e*
D	–*e*	0

38 Four students are asked to comment on the processes of nuclear fission and nuclear fusion.

Their comments are recorded in the table.

Which row is correct?

	fission	fusion
A	energy is absorbed	a large unstable nucleus splits
B	a large unstable nucleus splits	energy is absorbed
C	two light nuclei join	energy is absorbed
D	energy is released	two light nuclei join

© UCLES 2021
www.root19.com

+91 - 9969 353 591

39 Radon $^{219}_{86}Rn$ decays by emitting an α-particle.

Which nuclide is formed in this decay?

A $^{215}_{84}Po$ **B** $^{223}_{88}Ra$ **C** $^{219}_{87}Fr$ **D** $^{219}_{85}At$

40 The graph shows the activity of a radioactive source over a period of time.

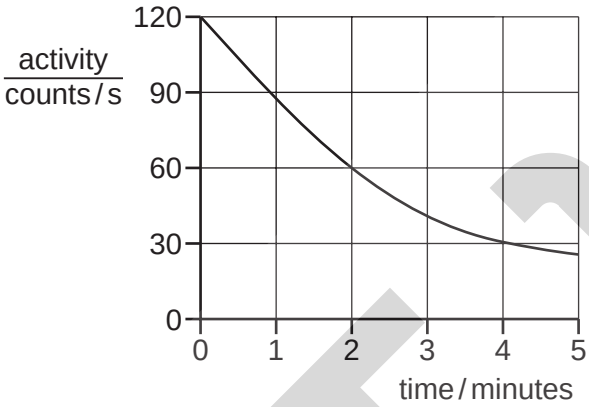

What is the half-life of the source?

A 1.0 minute **B** 2.0 minutes **C** 2.5 minutes **D** 4.0 minutes

Permission to reproduce items where third-party owned material protected by copyright is included has been sought and cleared where possible. Every reasonable effort has been made by the publisher (UCLES) to trace copyright holders, but if any items requiring clearance have unwittingly been included, the publisher will be pleased to make amends at the earliest possible opportunity.

To avoid the issue of disclosure of answer-related information to candidates, all copyright acknowledgements are reproduced online in the Cambridge Assessment International Education Copyright Acknowledgements Booklet. This is produced for each series of examinations and is freely available to download at www.cambridgeinternational.org after the live examination series.

Cambridge Assessment International Education is part of the Cambridge Assessment Group. Cambridge Assessment is the brand name of the University of Cambridge Local Examinations Syndicate (UCLES), which itself is a department of the University of Cambridge.

www.root19.com +91 - 9969 353 391